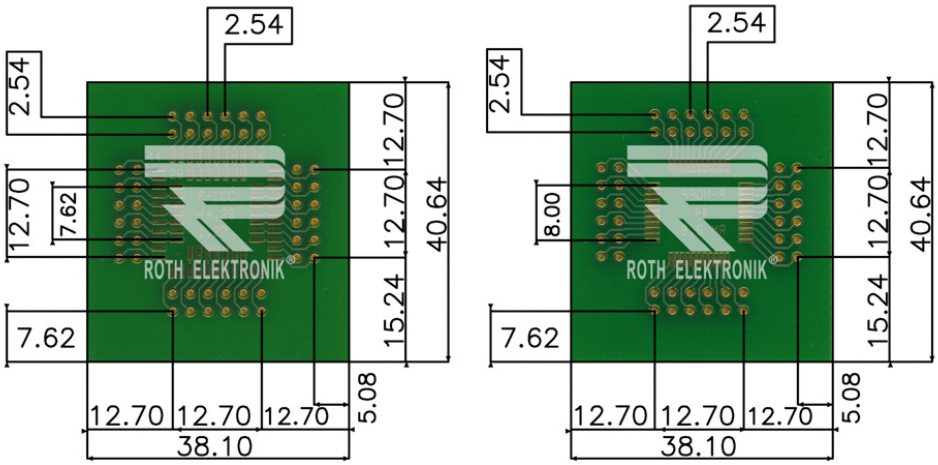

RE460-06

- Epoxy fibre-glass FR4 1.50 mm
- Double-sided 35 µm CU
- Plated through holes (PTH)
- Surface chem. Ni/Au and solder stop mask
- Adaption circuit board for PLCC 28, 44 (1.27 mm) and QFP 44 (0.80 mm)
- Hole diameter 1.00 mm
- Size 38.10 x 40.64 mm

072025